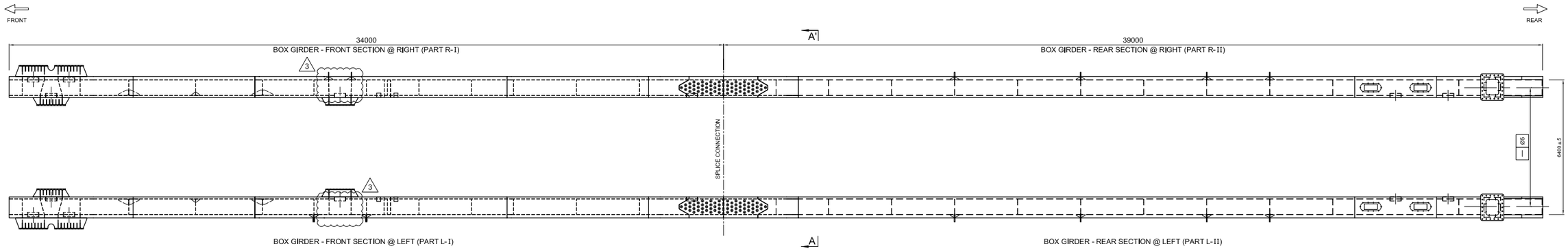

PLAN VIEW

SCALE 1:100

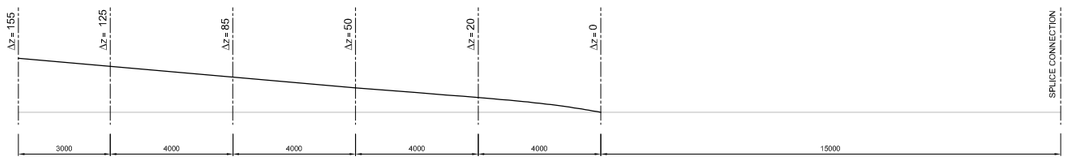

PRE CAMBER

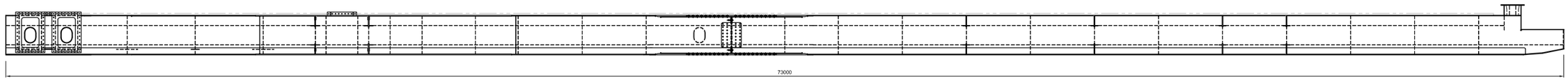

ELEVATION

SCALE 1:100

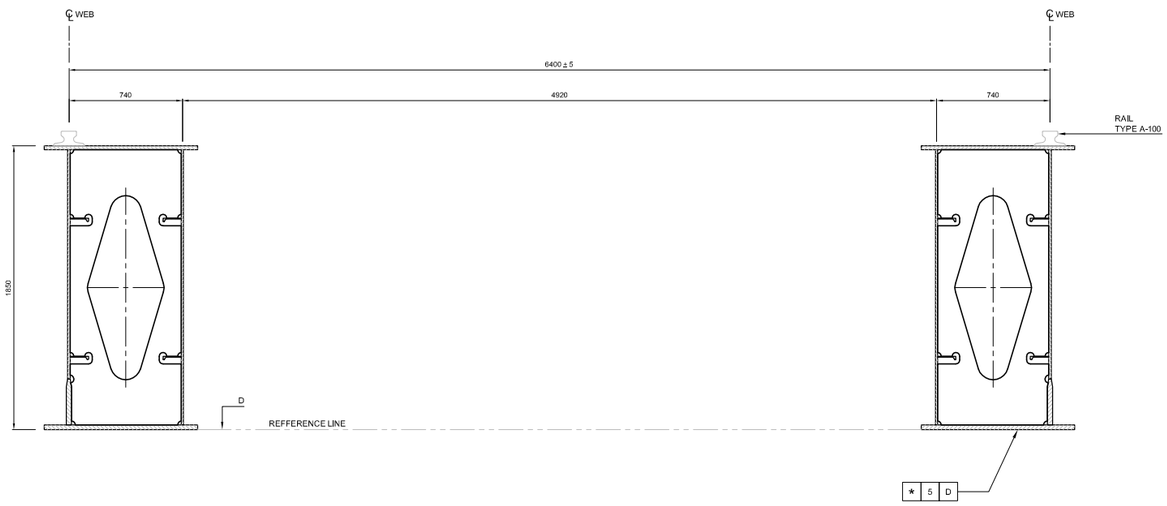

SECTION A-A

SCALE 1:20

* THE BOTTOM FLANGES IN THE ASSEMBLY SHOULD BE ALIGNED WITHIN ±5mm FOR EVERY CROSS SECTION.

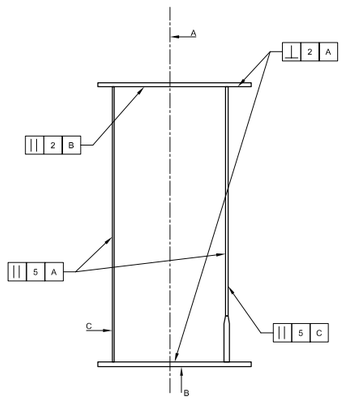

DESIGN TOLERANCES

S355, J2G3 OR EQUIVALENT

WELDS

-ALL WELDING IN ACCORDANCE WITH 'AWS'.

-MENTIONED WELD SIZE ARE LEG SIZES.

-ALL BUTT WELDS IN TOP AND BOTTOM FLANGES TO BE GRINDED FLUSH.

-TYPICAL PLATE THICKNESS TRANSFER.

-REMOVED TEXT " * INDICATED PRE CHAMBER (ΔZ) VALUES ON HOLD"
-ALIGNMENT OF STIFFENER I.W.O TRANSVERSE BEAM CONNECTOR 2 IN BOX GIRDER @ LEFT
-ANGLE STIFFENER I.W.O TRANSVERSE BEAM CONNECTOR 2 AND HAMMER STAND IN BOX GIRDER @ RIGHT

-CHANGE THE VALUE OF PRE CAMBER LOAD
-ADDITIONAL VALUE OF STRAIGHTNESS

No.	Description	Date	Drn	Chk	App	Client	App

TWD

TEMPORARY WORKS DESIGN

bam international CLOUGH

Project: PWD LNG - CANTILEVER BRIDGE

Title: BOX GIRDER GENERAL ASSEMBLY

Scale	Drawn	Checked	Approved	Size	Rev
1:100	1:20	SKB		A1	-

Drawing No: 2019-026-D-0200 | Sheet: 3

DO NOT SCALE | IF IN DOUBT ASK | The content of this drawing is confidential and must not be disclosed without the written permission of Temporary Works Design | File Location: C:\Users\mirdeyle\Desktop\old - backup\2019-026-D-0200-REV3.dwg